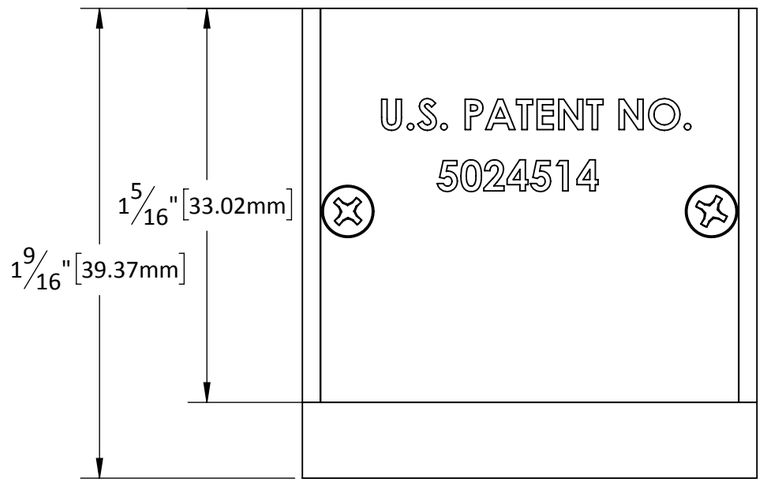

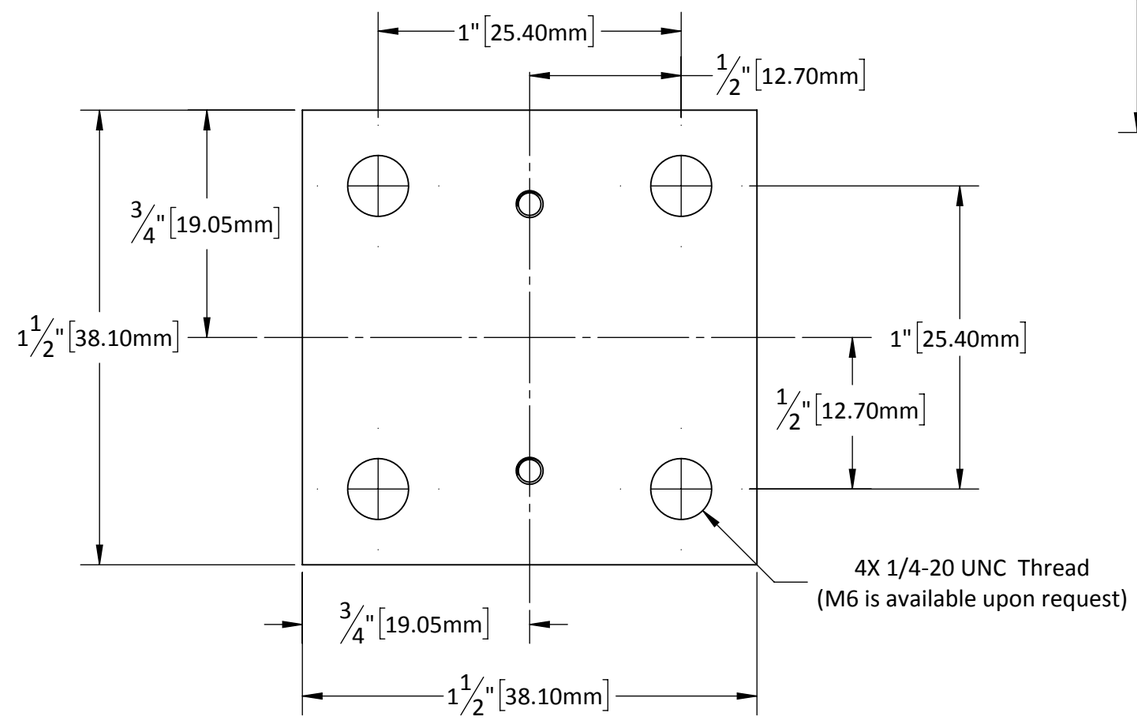

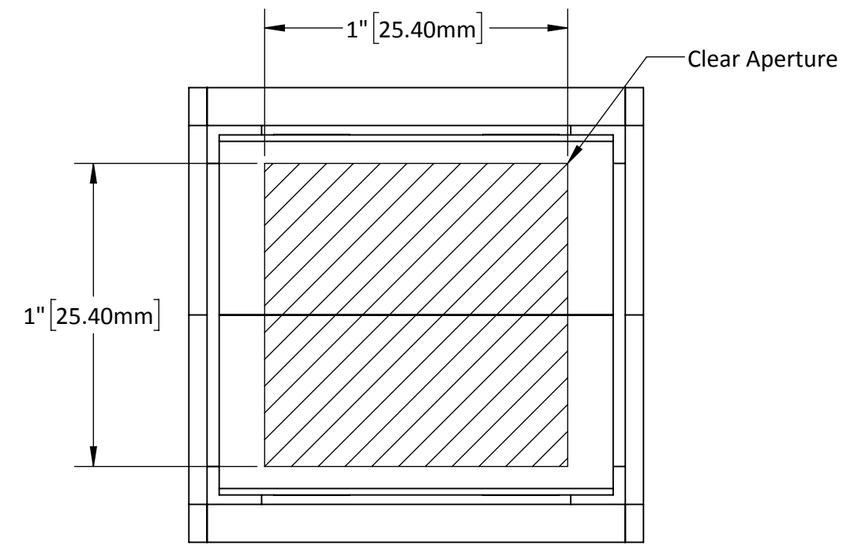

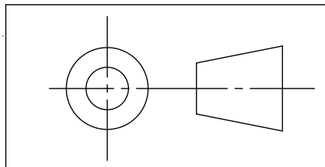

UNLESS OTHERWISE SPECIFIED DIMENSIONS ARE IN INCHES TOLERANCES ARE:

FRACTIONS	DECIMALS	ANGLES
± 1/16"	± XX .030" ± XXX .010"	± 1'

INNOVATIVE OPTICAL SYSTEMS

1.00" x 1.00" Clear Aperture Hollow Roof Mirror Reflector Assembly

RM-101

PROPRIETARY NOTICE

THIS DRAWING AND THE ITEMS DEPICTED HEREIN ARE THE PROPERTY OF PLX INC. THEY ARE FURNISHED FOR EVALUATION PURPOSES ONLY AND SHALL NOT BE DISCLOSED OR DUPLICATED OR USED FOR ANY COMMERCIAL PURPOSES WITHOUT THE EXPRESS WRITTEN CONSENT OF PLX INC.